Inductive Sensors

BES Q40KEU-USU25F-S27G

BALLUFF
sensors worldwide

Quader 40 x 40
Sn = 25 mm
AC-DC 2-Wire
unshielded

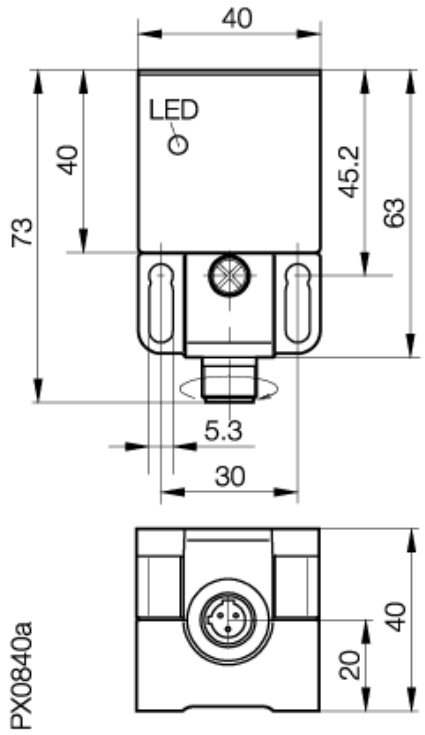

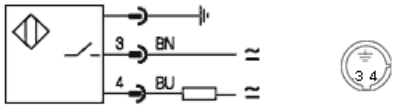

Common Data

Mounting		unshielded
Rated operating distance Sn	mm	25,0
Assured operating distance Sa	mm	0...20.2
Repeatability	%	<= 5
Hysteresis	%	<= 20
Function indication		yes
Ambient temperature range	°C	-25...+70
Polution Degree		3
IEC-Code		I2C40AU2
Time delay before availability	ms	<= 100

Mechanical Data

Housing size	mm	Quader 40 x 40
Measurements BxHxT or DxT	mm	40 x 40 x 73
Housing material		PBTP/Gd ZnAl4Cu1
Material of sensing face		PBTP
Degree of protection		IP67
Connection		Connector S27

Electrical Data

Current type		AC-DC
Wiring		2-Wire
switching function		normally-open
Rated operational voltage	V	110 AC
Rated operational current	mA	250
Supply voltage	V	20...250 AC/DC
Ripple	%	-
Rated supply frequency	Hz	50/60/DC
Rated supply frequency	Hz	100
Minimum operational current	mA	5
No-load supply current	mA	-
Off-state current	µA	<= 1700
Inrush current	mA	2/1
Voltage drop	V	<= 11/<= 7.5
Short circuit protection		yes
Protected against polarity reversal		yes

Utilization categories AC 140/DC 13

If not differently indicated,
all values by IEC 60947-5-2 (DIN EN60947-5-2)
Specifications subject to change

Balluff GmbH
Postfach 1160
73761 Neuhausen
Telefon (07158) 173-0
Telefax (07158) 5010

15.11.2007 / Online-Information