Inductive Sensors

BES 516-125-SA 1-05

cyl. M30
Sn = 15 mm
DC 4-Wire
unshielded

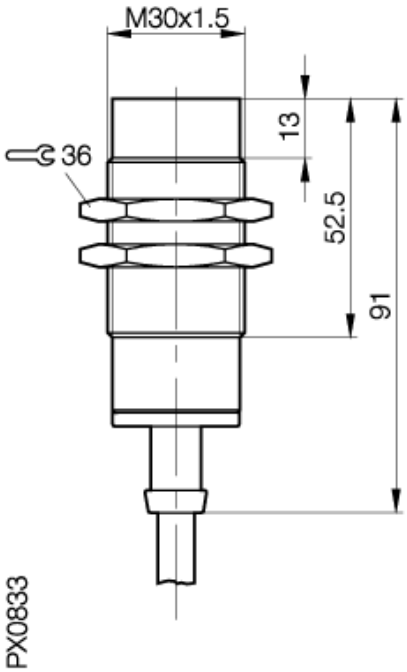

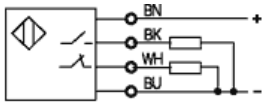

Utilization categories DC 13

Common Data

Mounting		unshielded
Rated operating distance Sn	mm	15,0
Assured operating distance Sa	mm	0...12.0
Repeatability	%	<= 5
Hysteresis	%	<= 15
Ambient temperature range	°C	-25...+120
Polution Degree		3
IEC-Code		I2A30CP1
Time delay before availability	ms	<= 10
Particular characteristics		temperature rated

Mechanical Data

Housing size	mm	cyl. M30
Measurements BxHxT or DxT	mm	M30x1.5 x 91
Housing material		nickel plated brass
Material of sensing face		PA 12
Degree of protection		IP67
Connection		Cable
Cable type		SIHF

Electrical Data

Current type		DC
Wiring		4-Wire
switching function		Complementary
Output signal		PNP
Rated operational voltage	V	24 DC
Rated operational current	mA	400
Supply voltage	V	10...30 DC
Ripple	%	<= 15
Rated supply frequency	Hz	100
No-load supply current	mA	<= 15/<= 15
Off-state current	µA	<= 80
Voltage drop	V	<= 1.5/-
Short circuit protection		no
Protected against polarity reversal		yes

EMV

ESD/RFI/Burst/IVW
Emission

10.03.2005 / Online-Information

If not differently indicated,
all values by IEC 60947-5-2 (DIN EN60947-5-2)
Specifications subject to change

Balluff GmbH
Postfach 1160
73761 Neuhausen
Telefon (07158) 173-0
Telefax (07158) 5010