Inductive Sensors
BES 516-327-S 4-CW

cyl. M30
Sn = 10 mm
DC 3-Wire
shielded

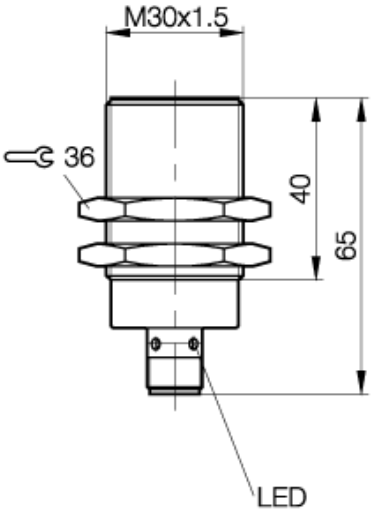

PX0107

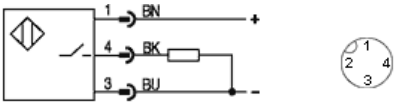

Utilization categories DC 13

Tightening torque:

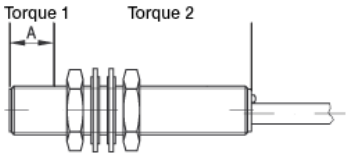

Torque 1	Nm	30

If only torque1 is indicated,
this applies to entire thread

If not differently indicated,
all values by IEC 60947-5-2 (DIN EN60947-5-2)
Specifications subject to change

Balluff GmbH
Postfach 1160
73761 Neuhausen
Telefon (07158) 173-0
Telefax (07158) 5010

Common Data

Mounting		shielded
Rated operating distance Sn	mm	10,0
Assured operating distance Sa	mm	0...8.1
Repeatability	%	<= 5
Hysteresis	%	<= 15
Function indication		yes
Ambient temperature range	°C	-25...+70
Polution Degree		3
IEC-Code		I1A30AP2
Time delay before availability	ms	<= 80
Particular characteristics		magnetic field immune

Mechanical Data

Housing size	mm	cyl. M30
Measurements BxHxT or DxT	mm	M30x1.5 x 65
Housing material		brass, PTFE coated
Material of sensing face		PTFE
Degree of protection		IP67
Connection		Connector S4

Electrical Data

Current type		DC
Wiring		3-Wire
switching function		normally-open
Output signal		PNP
Rated operational voltage	V	24 DC
Rated operational current	mA	200
Supply voltage	V	10...30 DC
Ripple	%	<= 15
Rated supply frequency	Hz	25
No-load supply current	mA	<= 12/<= 6
Off-state current	µA	<= 80
Voltage drop	V	<= 2.5/-
Short circuit protection		yes
Protected against polarity reversal		yes

03.06.2004 / Online-Information