Inductive Sensors
BES 516-120-S 4-C

cyl. M30
Sn = 10 mm
DC 4-Wire
shielded

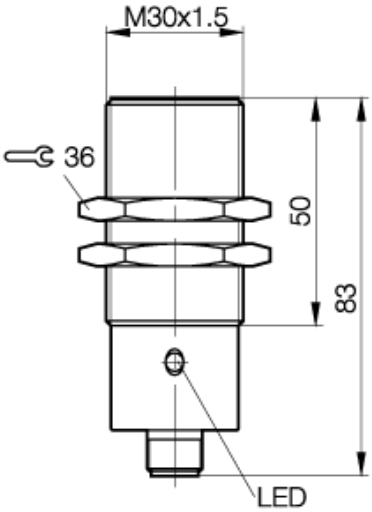

PX0030

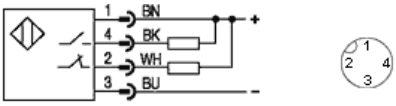

Utilization categories DC 13

Common Data

Mounting		shielded
Rated operating distance Sn	mm	10,0
Assured operating distance Sa	mm	0...8.1
Repeatability	%	<= 5
Hysteresis	%	<= 15
Function indication		yes
Ambient temperature range	°C	-25...+70
Polution Degree		3
IEC-Code		I1A30CN2
Time delay before availability	ms	<= 10

Mechanical Data

Housing size	mm	cyl. M30
Measurements BxHxT or DxT	mm	M30x1.5 x 83
Housing material		nickel plated brass
Material of sensing face		PA 12
Degree of protection		IP68 acc. BWN Pr 20
Connection		Connector S4

Electrical Data

Current type		DC
Wiring		4-Wire
switching function		Complementary
Output signal		NPN
Rated operational voltage	V	24 DC
Rated operational current	mA	200
Supply voltage	V	10...30 DC
Ripple	%	<= 15
Rated supply frequency	Hz	300
No-load supply current	mA	<= 30/<= 20
Off-state current	µA	<= 80
Voltage drop	V	<= 2.5/-
Short circuit protection		yes
Protected against polarity reversal		yes

EMV

ESD/RFI/Burst/IVW
Emission

21.01.2004 / Online-Information

If not differently indicated,
all values by IEC 60947-5-2 (DIN EN60947-5-2)
Specifications subject to change
Balluff GmbH
Postfach 1160
73761 Neuhausen
Telefon (07158) 173-0
Telefax (07158) 5010