**Inductive Sensors**
# BES 515-360-BO-C-PU-03

**cyl. M18**
**Sn = 8 mm**
**DC 3-Wire**
**unshielded**

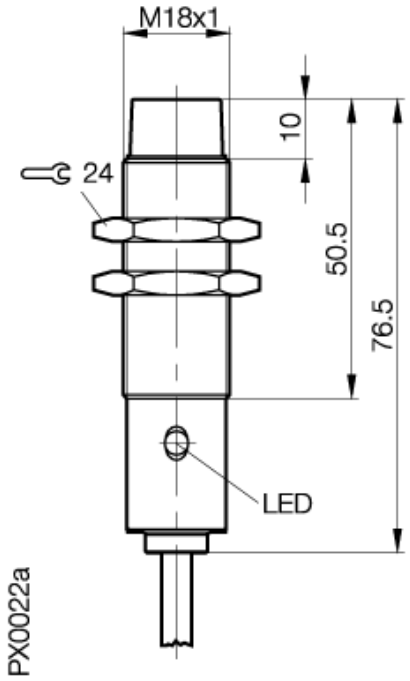


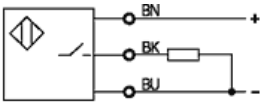


Utilization categories DC 13

## Common Data

| | | |
|---|---|---|
| Mounting | | unshielded |
| Rated operating distance Sn | mm | 8,0 |
| Assured operating distance Sa | mm | 0...6.5 |
| Repeatability | % | <= 5 |
| Hysteresis | % | <= 15 |
| Function indication | | yes |
| Ambient temperature range | °C | -40...+85 |
| Polution Degree | | 3 |
| IEC-Code | | I2A18AP1 |
| Time delay before availability | ms | <= 10 |

## Mechanical Data

| | | |
|---|---|---|
| Housing size | mm | cyl. M18 |
| Measurements BxHxT or DxT | mm | M18x1 x 76.5 |
| Housing material | | 1.4305 |
| Material of sensing face | | PA 12 |
| Degree of protection | | IP68 acc. BWN Pr 20 |
| Connection | | Cable |
| Cable type | | LifY-Y-11Y-O |

## Electrical Data

| | | |
|---|---|---|
| Current type | | DC |
| Wiring | | 3-Wire |
| switching function | | normally-open |
| Output signal | | PNP |
| Rated operational voltage | V | 24 DC |
| Rated operational current | mA | 200 |
| Supply voltage | V | 10...30 DC |
| Ripple | % | <= 15 |
| Rated supply frequency | Hz | 600 |
| No-load supply current | mA | <= 12 / <= 4 |
| Off-state current | µA | <= 10 |
| Voltage drop | V | <= 1.5 / - |
| Short circuit protection | | yes |
| Protected against polarity reversal | | yes |

## EMV

ESD / RFI / Burst / IVW
Emission

10.03.2005 / Online-Information

If not differently indicated,
all values by IEC 60947-5-2 (DIN EN60947-5-2)
Specifications subject to change

Balluff GmbH
Postfach 1160
73761 Neuhausen
Telefon (07158) 173-0
Telefax (07158) 5010