Inductive Sensors
BES 516-213-E5-E-S 21

BALLUFF

cyl. M18
Sn = 8 mm
AC-DC 2-Wire
unshielded

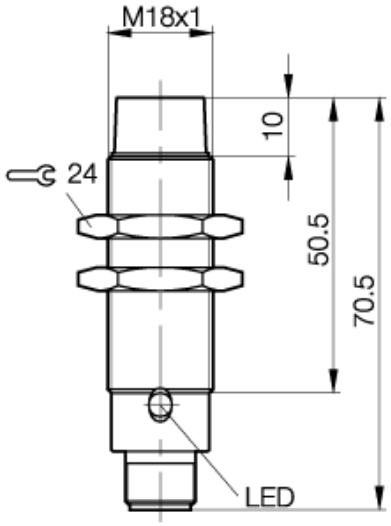

PX0705

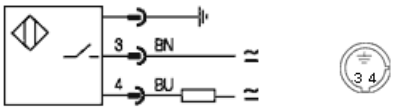

Utilization categories AC 140;DC 13

Tightening torque:

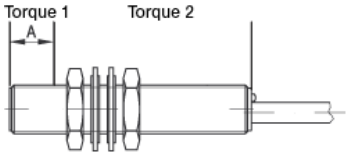

Torque 1	Nm	35

If only torque1 is indicated,
this applies to entire thread

If not differently indicated,
all values by IEC 60947-5-2 (DIN EN60947-5-2)
Specifications subject to change

Balluff GmbH
Postfach 1160
73761 Neuhausen
Telefon (07158) 173-0
Telefax (07158) 5010

Common Data

Mounting		unshielded
Rated operating distance Sn	mm	8,0
Assured operating distance Sa	mm	0...6.4
Repeatability	%	≤ 5
Hysteresis	%	≤ 15
Function indication		yes
Ambient temperature range	°C	-25...+70
Polution Degree		3
IEC-Code		I2A18AU2
Time delay before availability	ms	≤ 100

Mechanical Data

Housing size	mm	cyl. M18
Measurements BxHxT or DxT	mm	M18x1 x 70.5
Housing material		nickel plated brass
Material of sensing face		PA 12
Degree of protection		IP67
Connection		Connector S21

Electrical Data

Current type		AC-DC
Wiring		2-Wire
switching function		normally-open
Rated operational voltage	V	110 AC
Rated operational current	mA	250
Supply voltage	V	20...250 AC
Rated supply frequency	Hz	250
Minimum operational current	mA	5.0
Off-state current	µA	≤ 1700
Voltage drop	V	≤ 11.0/≤ 7.5
Short circuit protection		yes
Protected against polarity reversal		yes

EMV

ESD/RFI/Burst/IVW

Emission

07.06.2004 / Online-Information