Inductive Sensors
BES 516-360-E4-Y

cyl. M18
Sn = 8 mm
DC 3-Wire
unshielded

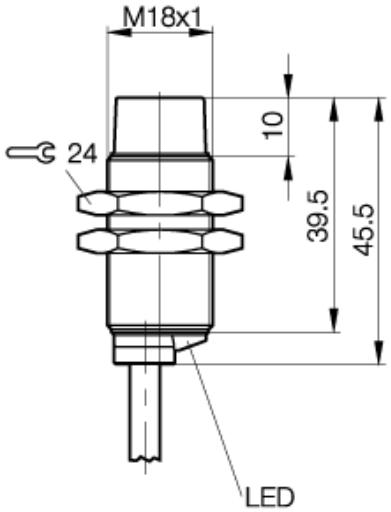

PX0372

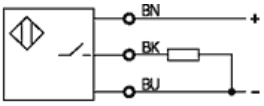

Utilization categories DC 13

Common Data

Mounting		unshielded
Rated operating distance Sn	mm	8,0
Assured operating distance Sa	mm	0...6.5
Repeatability	%	<= 5
Hysteresis	%	<= 15
Function indication		yes
Ambient temperature range	°C	-25...+70
Polution Degree		3
IEC-Code		I2A18AP1
Time delay before availability	ms	<= 60

Mechanical Data

Housing size	mm	cyl. M18
Measurements BxHxT or DxT	mm	M18x1 x 45.5
Housing material		nickel plated brass
Material of sensing face		PA 12
Degree of protection		68 acc. BWN Pr 20
Connection		Cable
Cable type		LiYY-O

Electrical Data

Current type		DC
Wiring		3-Wire
switching function		normally-open
Output signal		PNP
Rated operational voltage	V	24 DC
Rated operational current	mA	130
Supply voltage	V	10...30 DC
Ripple	%	<= 15
Rated supply frequency	Hz	200
No-load supply current	mA	<= 25/<= 12
Off-state current	µA	<= 80
Voltage drop	V	<= 3.5/-
Short circuit protection		yes
Protected against polarity reversal		yes

EMV

ESD/RFI/Burst/IVW
Emission

21.01.2004 / Online-Information

If not differently indicated,
all values by IEC 60947-5-2 (DIN EN60947-5-2)
Specifications subject to change

Balluff GmbH
Postfach 1160
73761 Neuhausen
Telefon (07158) 173-0
Telefax (07158) 5010