Inductive Sensors
BES 516-366-G-E4-Y-03

cyl. M18
Sn = 8 mm
DC 3-Wire
shielded

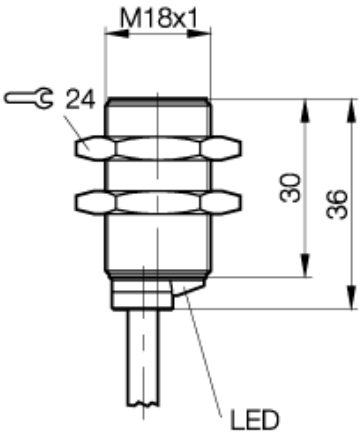

PX0143

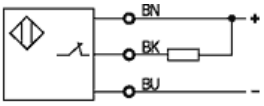

Utilization categories DC 13

Common Data

Mounting		shielded
Rated operating distance Sn	mm	8,0
Assured operating distance Sa	mm	0...6.4
Repeatability	%	<= 5
Hysteresis	%	<= 15
Function indication		yes
Ambient temperature range	°C	-25...+70
Polution Degree		3
IEC-Code		I1A18BN1
Time delay before availability	ms	<= 10

Mechanical Data

Housing size	mm	cyl. M18
Measurements BxHxT or DxT	mm	M18x1 x 36
Housing material		nickel plated brass
Material of sensing face		PBTP
Degree of protection		68 acc. BWN Pr 20
Connection		Cable
Cable type		LiYY-O

Electrical Data

Current type		DC
Wiring		3-Wire
switching function		normally-closed
Output signal		NPN
Rated operational voltage	V	24 DC
Rated operational current	mA	130
Supply voltage	V	10...30 DC
Ripple	%	<= 15
Rated supply frequency	Hz	200
No-load supply current	mA	<= 12 / <= 25
Off-state current	µA	<= 80
Voltage drop	V	<= 3.5 / -
Short circuit protection		yes
Protected against polarity reversal		yes

EMV

ESD / RFI / Burst / IVW
Emission

31.05.2006 / Online-Information

Further information:
- Einbauhinweise 825357

If not differently indicated,
all values by IEC 60947-5-2 (DIN EN60947-5-2)
Specifications subject to change

Balluff GmbH
Postfach 1160
73761 Neuhausen
Telefon (07158) 173-0
Telefax (07158) 5010