Inductive Sensors
BES M12MG1-NSC60B-S04G

BALLUFF

cyl. M12
Sn = 6 mm
DC 3-Wire
quasi shielded

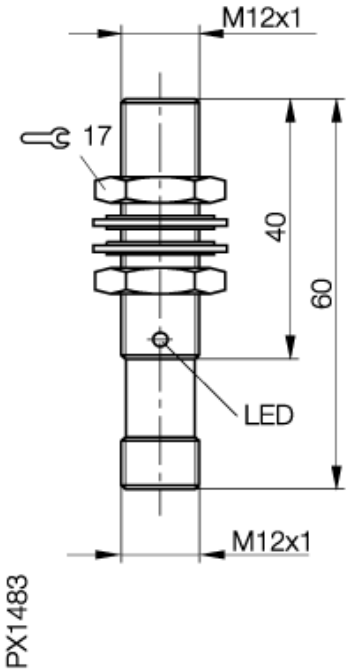

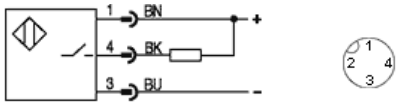

Utilization categories DC 13

Further information:
- Einbauhinweise 825356

Tightening torque:

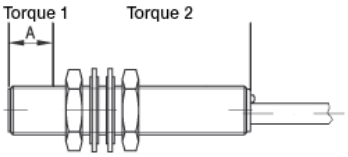

Torque 1	Nm	10

If only torque1 is indicated,
this applies to entire thread

If not differently indicated,
all values by IEC 60947-5-2 (DIN EN60947-5-2)
Specifications subject to change

Balluff GmbH
Postfach 1160
73761 Neuhausen
Telefon (07158) 173-0
Telefax (07158) 5010

Common Data

Mounting		quasi shielded
Rated operating distance Sn	mm	6,0
Assured operating distance Sa	mm	0...4,9
Repeatability	%	<= 5
Function indication		yes
Ambient temperature range	°C	-25...+70

Mechanical Data

Housing size	mm	cyl. M12
Measurements BxHxT or DxT	mm	M12 x 60
Housing material		CuZn chrome plated
Material of sensing face		PBT
Degree of protection		IP67
Connection		Connector S4

Electrical Data

Current type		DC
Wiring		3-Wire
switching function		normally-open
Output signal		NPN
Rated operational voltage	V	24 DC
Rated operational current	mA	200
Supply voltage	V	10...30 DC
Rated supply frequency	Hz	800
No-load supply current	mA	<= 10
Off-state current	µA	<= 100
Voltage drop	V	<= 2
Short circuit protection		yes
Protected against polarity reversal		yes

11.08.2004 / Online-Information