Inductive Sensors
BES 516-300-S 271-S 4

cyl. M22
Sn = 3 mm
DC 3-Wire
shielded

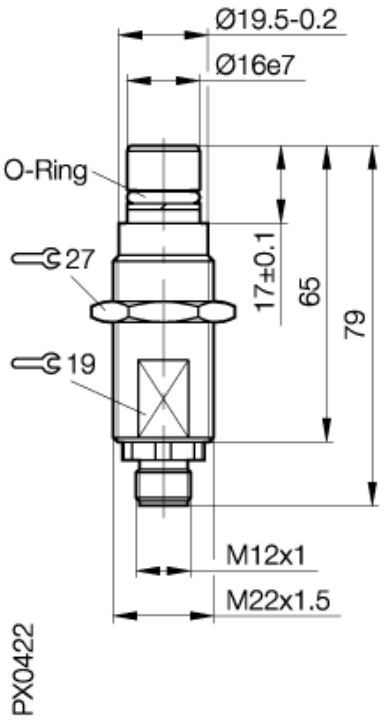

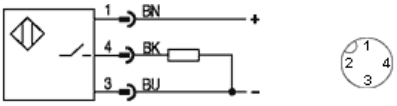

Utilization categories DC 13

Common Data

Mounting		shielded
Rated operating distance Sn	mm	3,0
Assured operating distance Sa	mm	0...2.1
Repeatability	%	<= 5
Hysteresis	%	<= 15
Function indication		yes
Ambient temperature range	°C	0...+85
Polution Degree		3
IEC-Code		I1A22AP2
Time delay before availability	ms	<= 10
Particular characteristics		pressure rated to 350 bar

Mechanical Data

Housing size	mm	cyl. M22
Measurements BxHxT or DxT	mm	M22x1.5 x 79
Housing material		1.4104
Material of sensing face		POM GF
Degree of protection		IP68 acc. BWN Pr 20
Connection		Connector S4

Electrical Data

Current type		DC
Wiring		3-Wire
switching function		normally-open
Output signal		PNP
Rated operational voltage	V	24 DC
Rated operational current	mA	200
Supply voltage	V	10...30 DC
Ripple	%	<= 15
Rated supply frequency	Hz	500
No-load supply current	mA	<= 20/<= 12
Off-state current	µA	<= 80
Voltage drop	V	<= 1.5/-
Short circuit protection		no
Protected against polarity reversal		yes

EMV

ESD/RFI/Burst/IVW
Emission

21.01.2004 / Online-Information

If not differently indicated,
all values by IEC 60947-5-2 (DIN EN60947-5-2)
Specifications subject to change

Balluff GmbH
Postfach 1160
73761 Neuhausen
Telefon (07158) 173-0
Telefax (07158) 5010