Inductive Sensors
BES 516-300-S203

cyl. M18
Sn = 3 mm
DC 3-Wire
shielded

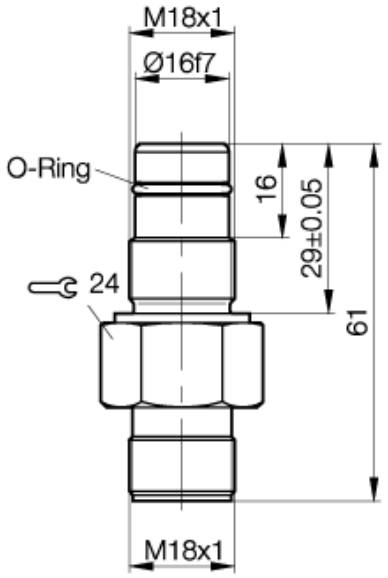

PX0722

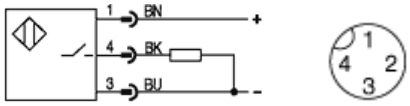

Utilization categories DC 13

Tightening torque:

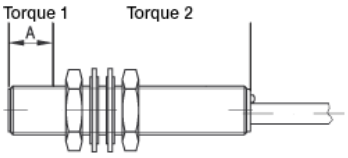

Torque 1	Nm	40

If only torque1 is indicated,
this applies to entire thread

If not differently indicated,
all values by IEC 60947-5-2 (DIN EN60947-5-2)
Specifications subject to change

Balluff GmbH
Postfach 1160
73761 Neuhausen
Telefon (07158) 173-0
Telefax (07158) 5010

Common Data

Mounting		shielded
Rated operating distance Sn	mm	3,0
Assured operating distance Sa	mm	0...2.1
Repeatability	%	<= 5
Hysteresis	%	<= 15
Ambient temperature range	°C	-25...+80
Polution Degree		3
IEC-Code		I1X18AP2
Time delay before availability	ms	<= 10
Particular characteristics		pressure rated to 500 bar

Mechanical Data

Housing size	mm	cyl. M18
Measurements BxHxT or DxT	mm	M18x1 x 61
Housing material		stainless steel
Material of sensing face		PEEK
Degree of protection		IP68 acc. BWN Pr 20
Connection		Connector

Electrical Data

Current type		DC
Wiring		3-Wire
switching function		normally-open
Output signal		PNP
Rated operational voltage	V	24 DC
Rated operational current	mA	<= 130
Supply voltage	V	10...30 DC
Ripple	%	<= 15
Rated supply frequency	Hz	1000
No-load supply current	mA	<= 20 / <= 12
Off-state current	µA	<= 80
Voltage drop	V	<= 3.5 / -
Short circuit protection		yes
Protected against polarity reversal		yes

19.08.2004 / Online-Information