Inductive Sensors
BES 515-356-E4-Y-03

cyl. M12
Sn = 4 mm
DC 3-Wire
unshielded

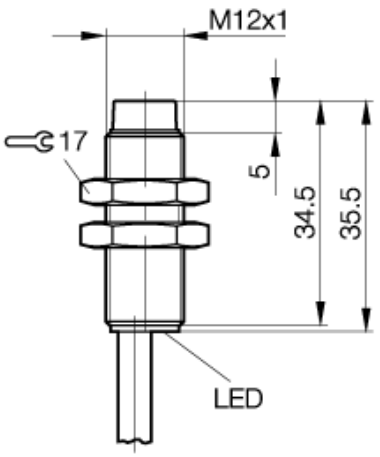

PX0826

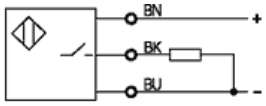

Utilization categories DC 13

Common Data

Mounting		unshielded
Rated operating distance Sn	mm	4,0
Assured operating distance Sa	mm	0...3.2
Repeatability	%	<= 5
Hysteresis	%	<= 15
Function indication		yes
Ambient temperature range	°C	-25...+70
Polution Degree		3
IEC-Code		I2A12AP1
Time delay before availability	ms	<= 10

Mechanical Data

Housing size	mm	cyl. M12
Measurements BxHxT or DxT	mm	M12x1 x 35.5
Housing material		stainless steel
Material of sensing face		PA 12
Degree of protection		IP68 acc. BWN Pr 20
Connection		Cable
Cable type		LiYY-O

Electrical Data

Current type		DC
Wiring		3-Wire
switching function		normally-open
Output signal		PNP
Rated operational voltage	V	24 DC
Rated operational current	mA	130
Supply voltage	V	10...30 DC
Ripple	%	<= 15
Rated supply frequency	Hz	400
No-load supply current	mA	<= 25/<= 15
Off-state current	µA	<= 80
Voltage drop	V	<= 3.5/-
Short circuit protection		yes
Protected against polarity reversal		yes

EMV

ESD/RFI/Burst/IVW
Emission

10.03.2005 / Online-Information

If not differently indicated,
all values by IEC 60947-5-2 (DIN EN60947-5-2)
Specifications subject to change

Balluff GmbH
Postfach 1160
73761 Neuhausen
Telefon (07158) 173-0
Telefax (07158) 5010

Casp System Sp. Z o.o., Puszkina 2, 43-603 Jaworzno, Polska, www.casp.pl, e-mail: biuro@casp.pl, tel/fax: +48 32 614 09 17