Inductive Sensors
BES 517-1603-QN-S

Quadraform 17.5 x 17
Sn = 3 mm
DC 3-Wire
shielded

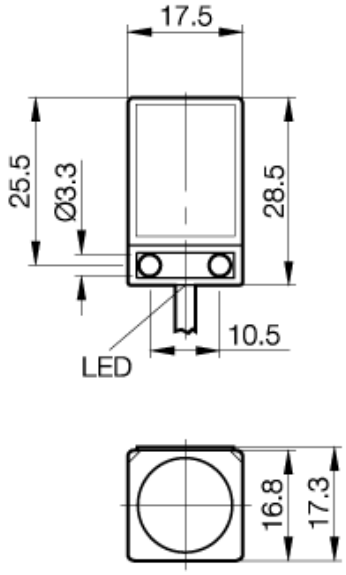

PX0588

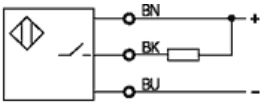

Utilization categories DC 13

Common Data

Mounting		shielded
Rated operating distance Sn	mm	3,0
Assured operating distance Sa	mm	0...2.4
Repeatability	%	<= 10
Hysteresis	%	<= 15
Function indication		yes
Ambient temperature range	°C	-25...+70
Polution Degree		3
IEC-Code		I1C17AN1
Time delay before availability	ms	<= 10

Mechanical Data

Housing size	mm	Quadraform 17.5 x 17
Measurements BxHxT or DxT	mm	17.5 x 17 x 28.5
Housing material		AES/CP
Material of sensing face		AES
Degree of protection		IP67
Connection		Cable
Cable type		LiYY-O

Electrical Data

Current type		DC
Wiring		3-Wire
switching function		normally-open
Output signal		NPN
Rated operational voltage	V	24 DC
Rated operational current	mA	50
Supply voltage	V	10...30 DC
Ripple	%	<= 15
Rated supply frequency	Hz	500
Minimum operational current	mA	-
No-load supply current	mA	<= 20/<= 12
Off-state current	µA	<= 80
Voltage drop	V	<= 1.8/-
Short circuit protection		yes
Protected against polarity reversal		yes

EMV

ESD/RFI/Burst/IVW
Emission

21.01.2004 / Online-Information

If not differently indicated,
all values by IEC 60947-5-2 (DIN EN60947-5-2)
Specifications subject to change
Balluff GmbH
Postfach 1160
73761 Neuhausen
Telefon (07158) 173-0
Telefax (07158) 5010

Casp System Sp. Z o.o., Puszkina 2, 43-603 Jaworzno, Polska, www.casp.pl, e-mail: biuro@casp.pl, tel/fax: +48 32 614 09 17