Inductive Sensors
BES 516-3019-S 4-C

cyl. M12
Sn = 4 mm
DC 3-Wire
unshielded

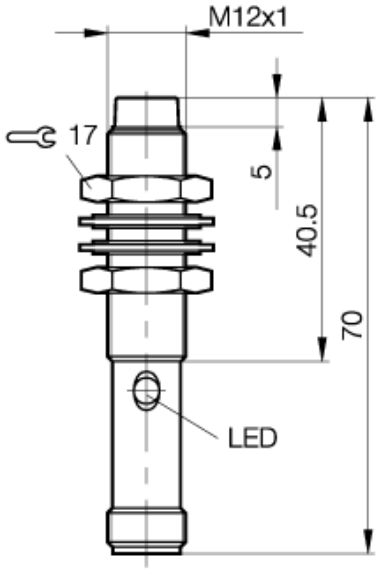

PX0055

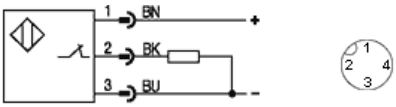

Utilization categories DC 13

Common Data

Mounting		unshielded
Rated operating distance Sn	mm	4,0
Assured operating distance Sa	mm	0...3.2
Repeatability	%	<= 5
Hysteresis	%	<= 15
Function indication		yes
Ambient temperature range	°C	-40...+85
Polution Degree		3
IEC-Code		I2A12BP2
Time delay before availability	ms	<= 20

Mechanical Data

Housing size	mm	cyl. M12
Measurements BxHxT or DxT	mm	M12x1 x 70
Housing material		stainless steel
Material of sensing face		PA 12
Degree of protection		IP68 acc. BWN Pr 20
Connection		Connector S4

Electrical Data

Current type		DC
Wiring		3-Wire
switching function		normally-closed
Output signal		PNP
Rated operational voltage	V	24 DC
Rated operational current	mA	200
Supply voltage	V	10...30 DC
Ripple	%	<= 15
Rated supply frequency	Hz	1500
No-load supply current	mA	<= 1/ <= 8
Off-state current	µA	<= 10
Voltage drop	V	<= 1.5/-
Short circuit protection		yes
Protected against polarity reversal		yes

If not differently indicated,
all values by IEC 60947-5-2 (DIN EN60947-5-2)
Specifications subject to change

Balluff GmbH
Postfach 1160
73761 Neuhausen
Telefon (07158) 173-0
Telefax (07158) 5010

10.03.2004 / Online-Information

Casp System Sp. Z o.o., Puszkina 2, 43-603 Jaworzno, Polska, www.casp.pl, e-mail: biuro@casp.pl, tel/fax: +48 32 614 09 17