Inductive Sensors
BES 516-543-S 4-H

cyl. M12
Sn = 2 mm
DC 2-Wire
shielded

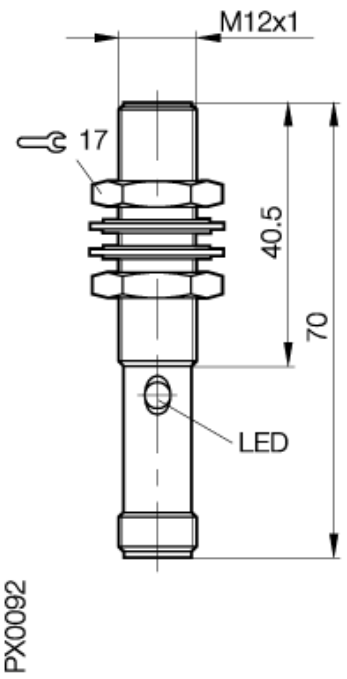

Utilization categories DC 13

Common Data

Mounting		shielded
Rated operating distance Sn	mm	2,0
Assured operating distance Sa	mm	0...1.6
Repeatability	%	<= 5
Hysteresis	%	<= 20
Function indication		yes
Ambient temperature range	°C	-25...+70
Polution Degree		3
IEC-Code		I1A12BD2
Time delay before availability	ms	<= 10

Mechanical Data

Housing size	mm	cyl. M12
Measurements BxHxT or DxT	mm	M12x1 x 70
Housing material		stainless steel
Material of sensing face		PA 12
Degree of protection		IP68 acc. BWN Pr 20
Connection		Connector S4

Electrical Data

Current type		DC
Wiring		2-Wire
switching function		normally-closed
Output signal		non-polarized
Rated operational voltage	V	24 DC
Rated operational current	mA	200
Supply voltage	V	10...55 DC
Ripple	%	<= 15
Rated supply frequency	Hz	2500
Minimum operational current	mA	5
No-load supply current	mA	-/-
Off-state current	µA	<= 500
Voltage drop	V	<= 5.0/-
Short circuit protection		yes
Protected against polarity reversal		yes

EMV

ESD/RFI/Burst/IVW
Emission

24.02.2004 / Online-Information

If not differently indicated,
all values by IEC 60947-5-2 (DIN EN60947-5-2)
Specifications subject to change

Balluff GmbH
Postfach 1160
73761 Neuhausen
Telefon (07158) 173-0
Telefax (07158) 5010

Casp System Sp. Z o.o., Puszkina 2, 43-603 Jaworzno, Polska, www.casp.pl, e-mail: biuro@casp.pl, tel/fax: +48 32 614 09 17