Inductive Sensors
BES 516-370-E4-C-PU-03

BALLUFF

cyl. M12
Sn = 2 mm
DC 3-Wire
shielded

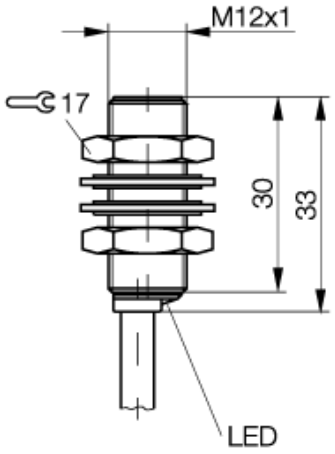

PX1247

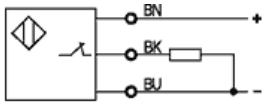

Common Data

Mounting		shielded
Rated operating distance Sn	mm	2,0
Assured operating distance Sa	mm	0...1.6
Repeatability	%	<= 5
Hysteresis	%	<= 15
Function indication		yes
Ambient temperature range	°C	-25...+70
Polution Degree		3
IEC-Code		I1A12BP1
Time delay before availability	ms	<= 15

Mechanical Data

Housing size	mm	cyl. M12
Measurements BxHxT or DxT	mm	M12x1 x 33
Housing material		nickel plated brass
Material of sensing face		PBTP
Degree of protection		IP68 acc. BWN Pr 20
Connection		Cable
Cable type		LifY-Y-11Y-O

Electrical Data

Current type		DC
Wiring		3-Wire
switching function		normally-closed
Output signal		PNP
Rated operational voltage	V	24 DC
Rated operational current	mA	200
Supply voltage	V	10...30 DC
Ripple	%	<= 15
Rated supply frequency	Hz	5000
Minimum operational current	mA	0
No-load supply current	mA	<= 2 / <= 10
Off-state current	µA	<= 30
Voltage drop	V	<= 2.0 / -
Short circuit protection		yes
Protected against polarity reversal		yes

Utilization categories DC 13

EMV

ESD / RFI / Burst / IVW	4 / 3 / 4 / 2
Emission	Gr.1, Kl.B

08.12.2005 / Online-Information

If not differently indicated,
all values by IEC 60947-5-2 (DIN EN60947-5-2)
Specifications subject to change

Balluff GmbH
Postfach 1160
73761 Neuhausen
Telefon (07158) 173-0
Telefax (07158) 5010

Casp System Sp. Z o.o., Puszkina 2, 43-603 Jaworzno, Polska, www.casp.pl, e-mail: biuro@casp.pl, tel/fax: +48 32 614 09 17