Inductive Sensors
BES 516-325-SA45

cyl. M12
Sn = 2 mm
DC 3-Wire
shielded

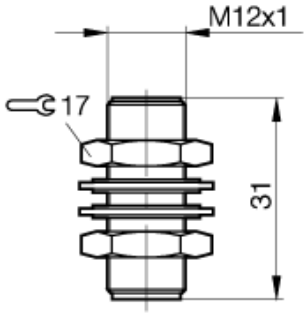

PX0127

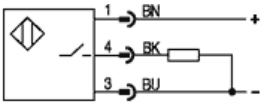

Utilization categories DC 13

Common Data

Mounting		shielded
Rated operating distance Sn	mm	2,0
Assured operating distance Sa	mm	0...1.6
Repeatability	%	<= 5
Hysteresis	%	<= 15
Function indication		yes
Ambient temperature range	°C	-25...+70
Polution Degree		3
IEC-Code		I1A12AP2
Time delay before availability	ms	<= 10

Mechanical Data

Housing size	mm	cyl. M12
Measurements BxHxT or DxT	mm	M12x1 x 31
Housing material		nickel plated brass
Material of sensing face		PA 12
Degree of protection		IP67
Connection		Connector

Electrical Data

Current type		DC
Wiring		3-Wire
switching function		normally-open
Output signal		PNP
Rated operational voltage	V	24 DC
Rated operational current	mA	200
Supply voltage	V	10...30 DC
Ripple	%	<= 15
Rated supply frequency	Hz	1000
No-load supply current	mA	<= 20/<= 12
Off-state current	µA	<= 80
Voltage drop	V	<= 2.5/-
Short circuit protection		yes
Protected against polarity reversal		yes

EMV

ESD/RFI/Burst/IVW
Emission

24.02.2004 / Online-Information

If not differently indicated,
all values by IEC 60947-5-2 (DIN EN60947-5-2)
Specifications subject to change
Balluff GmbH
Postfach 1160
73761 Neuhausen
Telefon (07158) 173-0
Telefax (07158) 5010