Inductive Sensors

BES M08MI-PSC15B-S49G

BALLUFF

cyl. M 8
Sn = 1,5 mm
DC 3-Wire
shielded

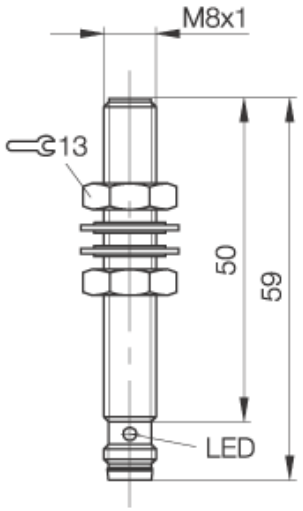

PX1546

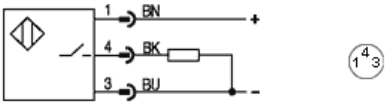

Utilization categories DC 13

Common Data

Mounting		shielded
Rated operating distance Sn	mm	1,5
Assured operating distance Sa	mm	0...1,2
Repeatability	%	<= 5
Function indication		yes
Ambient temperature range	°C	-25...+70

Mechanical Data

Housing size	mm	cyl. M 8
Measurements BxHxT or DxT	mm	M 8 x 59
Housing material		nickel platet brass
Material of sensing face		PBT
Degree of protection		IP67
Connection		Connector S49

Electrical Data

Current type		DC
Wiring		3-Wire
switching function		normally-open
Output signal		PNP
Rated operational voltage	V	24 DC
Rated operational current	mA	100
Supply voltage	V	12...30 DC
Rated supply frequency	Hz	1000
No-load supply current	mA	<= 12
Off-state current	µA	<= 20
Voltage drop	V	<= 2
Short circuit protection		yes
Protected against polarity reversal		yes

If not differently indicated,
all values by IEC 60947-5-2 (DIN EN60947-5-2)
Specifications subject to change

Balluff GmbH
Postfach 1160
73761 Neuhausen
Telefon (07158) 173-0
Telefax (07158) 5010

21.01.2004 / Online-Information

Casp System Sp. Z o.o., Puszkina 2, 43-603 Jaworzno, Polska, www.casp.pl, e-mail: biuro@casp.pl, tel/fax: +48 32 614 09 17